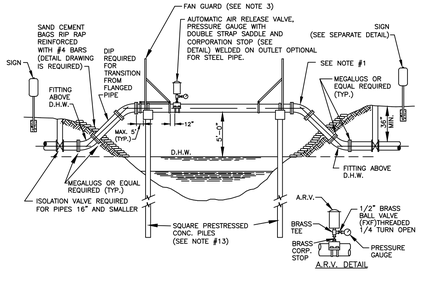

NOTES:

1. ALL EXPOSED PIPE SHALL BE DUCTILE IRON OR PREFABRICATED STEEL WITH FLANGED FITTINGS AND PROFILED GASKETS. RETAINER GLANDS AND UNIFLANGE TYPE FITTINGS ARE NOT TO BE SUBSTITUTED FOR FLANGED FITTINGS. PREFABRICATED STEEL PIPE MAY INCORPORATE WELDED ON LONG RADIUS UPPER BENDS. PREFABRICATED FLANGED PIPE SHALL BE FACTORY TESTED.
2. SPAN LENGTHS AS REQUIRED BY PERMITTING AGENCY
3. FAN GUARDS ARE REQUIRED. SEE FAN GUARD/PILE CAP DESIGN DETAILS FOR ADDITIONAL REQUIREMENTS. ACCESS PLATFORM AND GATE REQUIRED ON ARV SIDE ONLY.
4A. ALL EXPOSED PIPING SHALL BE PAINTED AS SPECIFIED IN THE APPROVED MATERIAL LIST.
4B. ALL HARDWARE SHALL BE PAINTED WITH COAL-TAR EPOXY.
5. PIPE SHALL BE CRADLED ON 3/8" THICK NEOPRENE(DUROMETER GRADE 50.) CURRENT FDOT STANDARDS APPLY. NEOPRENE IS REQUIRED AT ALL STRAPS INSTALLED OVER STEEL PIPE. NEOPRENE SHALL EXTEND MIN. 1" BEYOND THE EDGES OF CRADLE AND STRAPS.
6. TIE-DOWN STRAPS MUST PROPERLY FIT AND SECURE PIPE IN CRADLE.
7. PIPE CRADLE IN CAP SHALL CONTACT ⅓ CIRCUMFERENCE OF PIPE. (SEE FAN GUARD DETAIL)
8. SHOW EXISTING CANAL CROSS SECTION ULTIMATE CANAL SECTION AND RELEVANT ELEVATIONS AND DISTANCES ON A TO SCALE DETAIL DRAWING.
9. PILE LIFT CABLE SHALL BE REMOVED BELOW SURFACE; HOLE SHALL BE FILLED WITH EPOXY CEMENT.
10. THREADED AREAS OF BRASS FITTINGS SHALL BE SPIRAL WRAPPED WITH TWO WRAPS OF TEFLON TAPE.
11. THE PRESSURE GAUGE SHALL FACE THE CLOSEST FAN GUARD.
12. THE PRESSURE GAUGE SHALL BE "ASHCROFT NO. 45-1009A" OR APPROVED EQUAL.
13. THE PILES AND CAP DESIGN SHALL BE SHOWN ON TO SCALE SIGNED AND SEALED DETAIL DRAWINGS. (MIN. 12"x12" TYPE 1A FLORIDA DOT INDEX PILES ARE REQUIRED.) PILE PENETRATION BELOW CANAL BOTTOM SHALL BE 15' MINIMUM. MINIMUM LOAD CAPACITY OF 20 TONS PER PILE IS REQUIRED (FDOT STANDARDS APPLY). SIGNED AND SEALED SHOP DRAWINGS ARE REQUIRED.
14. STEEL PIPE SHALL HAVE WELDED ON BEARING PADS EXTENDING MIN. 1" BEYOND PIPE CRADLE THE PADS SHALL BE INSTALLED PRIOR TO PAINTING

POTABLE WATER MAIN TYPICAL AERIAL CANAL CROSSING – SINGLE PIPE (SINGLE PILES) 26W

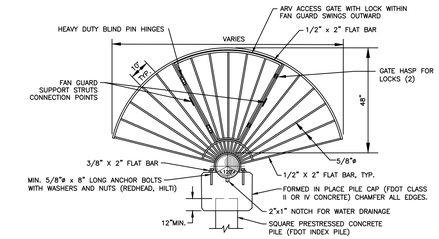

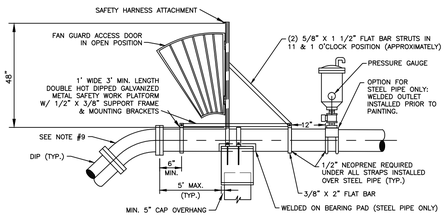

NOTES:

1. FAN GUARDS SHALL BE PLACED AT EACH END OF CANAL CROSSING.
2. HARDWARE SHALL BE PAINTED WITH COAL TAR EPOXY.
3. FANGUARD WITH HARDWARE SHALL BE FABRICATED FROM DOUBLE HOT DIPPED GALVANIZED STEEL.
4. SHOP DRAWINGS FOR FANGUARDS, CAPS, AND PILES MUST BE SUBMITTED TO PBCWUD FOR REVIEW AND APPROVAL PRIOR TO PRE-CONSTRUCTION MEETING.
5. REINFORCING STEEL SHALL CONFORM TO ASTM A-615, GRADE 60. MIN. 2" CONCRETE COVER OVER ALL STEEL.
6. SEE "TYPICAL CANAL CROSSING DETAIL" FOR ADDITIONAL REQUIREMENTS.
7. NO WELDING OF REBAR TO REBAR OR REBAR TO PILE STRANDS SHALL BE ALLOWED.
8. DESIGN DRAWINGS ARE REQUIRED.
9. LONG RADIUS WELDED ON UPPER BENDS ARE ACCEPTABLE FOR STEEL PIPE.
10. IF A PILE/CAP STEEL CONNECTION IS REQUIRED BY DESIGNING ENGINEER, MIN. (4) #8 REINFORCEMENT BARS SHALL BE DRILLED AND DOWELED (EPOXIED) MIN. 16" DEEP INTO THE PILE AND TIED WITH THE CAP STEEL.
11. ACCESS PLATFORM AND GATE REQUIRED ON ARV SIDE ONLY.

FAN GUARD/ PILE CAP DESIGN SINGLE PIPE (SINGLE PILES) 27W

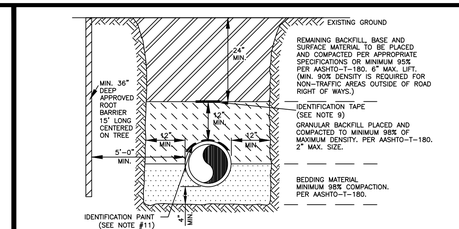

NOTES:

1. BEDDING SHALL CONSIST OF IN-SITU GRANULAR MATERIAL OR WASHED AND GRADED LIMEROCK 3/8" – 7/8" SIZING. UNSUITABLE IN-SITU MATERIALS SUCH AS MUCK, DEBRIS AND LARGER ROCKS SHALL BE REMOVED.
2. THE PIPE SHALL BE FULLY SUPPORTED FOR ITS ENTIRE LENGTH WITH APPROPRIATE COMPACTION UNDER THE PIPE HAUNCHES.
3. THE PIPE SHALL BE PLACED IN A DRY TRENCH.
4. BACKFILL SHALL BE FREE OF UNSUITABLE MATERIAL SUCH AS LARGE ROCK, MUCK AND DEBRIS.
5. DENSITY TESTS ARE REQUIRED IN 1 FDOT LIFTS ABOVE THE PIPE AT INTERVALS OF 400' MAXIMUM, MINIMUM 1 SET OF TESTS FOR EACH WASTEWATER GRAVITY MAIN RUN, OR AS DIRECTED BY THE INSPECTOR.
6. THE DEVELOPER/CONTRACTOR SHALL BE RESPONSIBLE TO COMPLY WITH ALL TRENCH SAFETY LAWS AND REGULATIONS.
7. SEE SEPARATE DETAILS FOR "PIPE INSTALLATION UNDER EXISTING PAVEMENT – OPEN CUT."
8. THE AFFECTED AREA SHALL BE RESTORED TO EQUAL OR BETTER CONDITION OR AS SPECIFIED IN PERMIT/CONTRACT DOCUMENTS.
9. APPROVED MAGNETIC TAPE IS REQUIRED FOR: ALL POTABLE WATER MAINS, FORCE MAINS AND RECLAIMED WATER MAINS. THE TAPE SHALL BE INSTALLED MAX. 24" BELOW FINISHED GRADE.
10. ROOT BARRIER IS REQUIRED FOR APPROVED TREE INSTALLATION CLOSER THAN 10 FEET FROM UTILITY FACILITIES.
11. CONTINUOUS 4" WIDE PAINT STRIPING IS REQUIRED FOR DIP/PCCP WATER MAINS (BLUE), DIP SEWER MAINS (GREEN), AND DIP RECLAIMED WATER MAINS (PURPLE).
12. PERMANENT ABOVE GROUND UTILITY MARKER SHALL BE INSTALLED IF REQUIRED BY PROPERTY OWNER GRANTING THE PIPE INSTALLATION PERMIT.
13. FOR PIPE INSTALLATIONS IN ROAD RIGHTS-OF-WAY, ROAD OWNER'S PERMIT SPECIFICATIONS SHALL APPLY.

TYPICAL TRENCH DETAIL/ ROOT BARRIER INSTALLATION DETAIL 23W

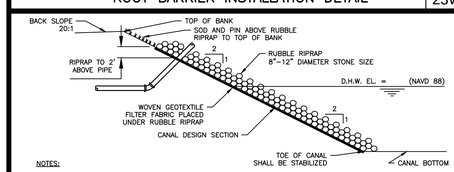

NOTES:

1. RUBBLE RIPRAP TO MEET F.D.O.T. STANDARD SPECIFICATIONS FOR ROAD AND BRIDGE CONSTRUCTION AND F.D.O.T. DESIGN STANDARDS.
2. DUMP RUBBLE IN PLACE FORMING A COMPACT LAYER CONFORMING TO THE CANAL DESIGN SECTION SLOPE. ENSURE THAT RUBBLE DOES NOT SEGREGATE SO THAT SMALLER PIECES EVENLY FILL THE VOIDS BETWEEN LAGER PIECES.
3. ALTERNATIVE DESIGN WILL BE CONSIDERED, SUBJECT TO APPROVAL BY THE CANAL PROPERTY OWNER.

RUBBLE RIPRAP DETAIL 45W

CONSTRUCTION PROCEDURES

THE BACKFILL FOR THE FIRST AND SECOND STAGES SHALL BE PLACED IN 6" LIFTS. (COMPACTED THICKNESS) AND SHALL BE COMPACTED TO 100% OF MAXIMUM DENSITY AS DETERMINED BY AASHTO T-99.

STAGE 1:

THE CONTRACTOR SHALL PROVIDE ADEQUATE COMPACTED FILL BENEATH THE HAUNCHES OF THE PIPE, USING MECHANICAL TAMPS SUITABLE FOR THIS PURPOSE. THIS COMPACTION APPLIES TO THE MATERIAL PLACED BENEATH THE HAUNCHES OF THE PIPE AND ABOVE ANY BEDDING REQUIRED.

STAGE 2:

THE CONTRACTOR SHALL OBTAIN A WELL-COMPACTED BED AND FILL ALONG THE SIDES OF THE PIPE AND TO A POINT INDICATING THE TOP OF SUB-GRADE MATERIAL.

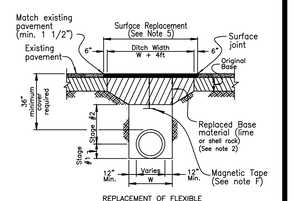

REPLACEMENT OF FLEXIBLE PAVEMENT FOR PERMITTED PAVEMENT CUT

CONSTRUCTION NOTES

1) BEDDING SHALL CONSIST OF IN-SITU GRANULAR MATERIAL OR WASHED AND GRADED LIMEROCK 3/8" – 7/8" SIZING WITH EQUAL OR GREATER STRUCTURAL ADEQUACY AS EXISTING. UNSUITABLE IN-SITU MATERIALS SUCH AS MUCK, DEBRIS AND LARGER ROCKS SHALL BE REMOVED.
2) REPLACED BASE MATERIAL (PER LAND DEVELOPMENT DESIGN STANDARDS) OVER DITCH SHALL BE TWICE THE THICKNESS OF THE ORIGINAL BASE OR 12" MINIMUM, WHICHEVER IS GREATER.
3) ASPHALT CONCRETE PAVEMENT JOINTS SHALL BE MECHANICALLY SAWED AND BUTT-JOINTED.
4) BASE MATERIAL SHALL BE PLACED IN TWO OR THREE LAYERS (6" MAX. PER LAYER) AND EACH LAYER THOROUGHLY ROLLED OR TAMPED TO THE SPECIFIED DENSITY.
5) SURFACE MATERIAL WILL BE CONSISTENT WITH THE EXISTING SURFACE OR 1 1/2" SI ASPHALTIC CONCRETE WITH RC-70 PRIME COAT AT 0.10 GAL/SQ. YD.
6) PIPE SHALL BE PLACED IN A DRY TRENCH.

GENERAL NOTES

A) ALL ROADWAY REPAIR WORK SHALL BE PERFORMED IN CONFORMANCE WITH APPLICABLE FDOT STANDARD SPECIFICATIONS FOR ROAD AND BRIDGE CONSTRUCTION AND COUNTY PP# EL-0-3606.
B) DENSITY TESTS SHALL BE TAKEN IN 1 FT LIFTS ABOVE THE PIPE AT INTERVALS OF 400 FT MAXIMUM (1 SET MINIMUM) OR AS DIRECTED BY THE CONSTRUCTION COORDINATION DIVISION. RESULTS SHALL BE SUBMITTED TO CONSTRUCTION COORDINATION DIVISION AS PART OF THEIR FIELD REVIEW.
C) ENGINEER-OF-RECORD SHALL PROVIDE FULL-TIME INSPECTION DURING THE ENTIRETY OF THE OPEN-CUT OPERATION, BEGINNING WITH THE EXCAVATION AND CONTINUING THROUGH THE COMPLETION OF THE PAVING.
D) IF THE PAVEMENT IS NOT COMPLETELY RESTORED IMMEDIATELY FOLLOWING THE OPEN CUT, A SMOOTH TEMPORARY PATCH (MINIMUM 1.25" ASPHALT) SHALL BE INSTALLED, PROPERLY MATCHING THE EXISTING GRADING OF THE ROADWAY. THE TEMPORARY PATCH SHALL BE ALLOWED TO REMAIN IN PLACE AND BE MAINTAINED FOR A PERIOD NO LONGER THAN 45 DAYS. THE COUNTY RETAINS THE RIGHT TO USE POSTED SURETY TO COMPLETE ANY RESTORATION WORK THAT HAS NOT BEEN COMPLETED IN THE 45 DAYS PERIOD. ALTERNATIVE TEMPORARY TRENCH PROTECTION (STEEL PLATES OR OTHERS) MAY BE APPROVED BY THE CONSTRUCTION COORDINATION DIVISION.
E) FOR THE FINAL RESTORATION, THE ROAD SHALL BE MILLED AND RESURFACED WITH 1-1/2" (ONE AND A HALF INCH) OF SIII OR SI ASPHALT SURFACE COURSE FOR A FULL LANE WIDTH ENCROACHED BY THE TRENCH.
F) APPROVED MAGNETIC TAPE IS REQUIRED FOR ALL MAIN PRESSURE PIPES AND CONDUIT IN THE COUNTY'S RIGHT-OF-WAY. INSTALL TAPE 24" BELOW FINISHED GRADE.
G) CONTINUOUS 4" WIDE PAINT STRIPING IS REQUIRED FOR DIP/PCCP WATER MAINS (BLUE), DIP SANITARY MAINS (GREEN), DIP RECLAIMED WATER MAINS (PURPLE), GAS MAINS (YELLOW), OR AS REQUIRED BY THE APWA.

OPEN CUT PIPE INSTALLATION NON-THOROUGHFARE ROAD 24W

CONSTRUCTION PROCEDURES

THE BACKFILL FOR THE FIRST AND SECOND STAGES SHALL BE PLACED IN 6" LIFTS. (COMPACTED THICKNESS) AND SHALL BE COMPACTED TO 100% OF MAXIMUM DENSITY AS DETERMINED BY AASHTO T-99.

STAGE 1:

THE CONTRACTOR SHALL PROVIDE ADEQUATE COMPACTED FILL BENEATH THE HAUNCHES OF THE PIPE, USING MECHANICAL TAMPS SUITABLE FOR THIS PURPOSE. THIS COMPACTION APPLIES TO THE MATERIAL PLACED BENEATH THE HAUNCHES OF THE PIPE AND ABOVE ANY BEDDING REQUIRED.

STAGE 2:

THE CONTRACTOR SHALL OBTAIN A WELL-COMPACTED BED AND FILL ALONG THE SIDES OF THE PIPE AND TO A POINT INDICATING THE TOP OF SUB-GRADE MATERIAL.

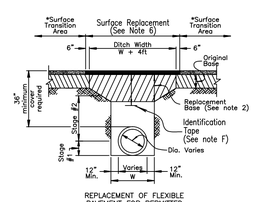

REPLACEMENT OF FLEXIBLE PAVEMENT FOR PERMITTED PAVEMENT CUT

CONSTRUCTION NOTES

1) BEDDING SHALL CONSIST OF IN-SITU GRANULAR MATERIAL OR WASHED AND GRADED LIMEROCK 3/8" – 7/8" SIZING WITH EQUAL OR GREATER STRUCTURAL ADEQUACY AS EXISTING. UNSUITABLE IN-SITU MATERIALS SUCH AS MUCK, DEBRIS AND LARGER ROCKS SHALL BE REMOVED.
2) REPLACED BASE MATERIAL OVER DITCH SHALL BE 16" MINIMUM FOR THOROUGHFARE PLAN ROADS.
3) ASPHALT CONCRETE PAVEMENT JOINTS SHALL BE MECHANICALLY SAWED AND BUTT-JOINTED.
4) BASE MATERIAL (PER ROADWAY PRODUCTION DESIGN STANDARDS) SHALL BE PLACED IN TWO OR THREE LAYERS (6" MAX. PER LAYER) AND EACH LAYER THOROUGHLY ROLLED OR TAMPED TO THE SPECIFIED DENSITY.
5) * SURFACE TRANSITION AREA (SEE PLANS FOR LOCATION). OVERLAY OR MILL/RESURFACE FOR A DISTANCE OF 50'ON BOTH SIDES OF THE OPEN CUT AND FOR A FULL LANE WIDTH.
6) 1" SIII ASPHALTIC CONCRETE OVER 1 1/2" SI ASPHALTIC CONCRETE WITH RC-70 PRIME COAT AT 0.10 GAL/SQ. YD.
7) PIPE SHALL BE PLACED IN A DRY TRENCH.

GENERAL NOTES

A) ALL ROADWAY REPAIR WORK SHALL BE PERFORMED IN CONFORMANCE WITH APPLICABLE FDOT STANDARD SPECIFICATIONS FOR ROAD AND BRIDGE CONSTRUCTION AND COUNTY PP# EL-0-3606.
B) DENSITY TESTS SHALL BE TAKEN IN 1 FT LIFTS ABOVE THE PIPE AT INTERVALS OF 400 FT MAXIMUM (1 SET MINIMUM) OR AS DIRECTED BY THE CONSTRUCTION COORDINATION DIVISION. RESULTS SHALL BE SUBMITTED TO CONSTRUCTION COORDINATION DIVISION AS PART OF THEIR FIELD REVIEW.
C) ENGINEER-OF-RECORD SHALL PROVIDE FULL-TIME INSPECTION DURING THE ENTIRETY OF THE OPEN-CUT OPERATION, BEGINNING WITH THE EXCAVATION AND CONTINUING THROUGH THE COMPLETION OF THE PAVING.
D) IF THE PAVEMENT IS NOT COMPLETELY RESTORED IMMEDIATELY FOLLOWING THE OPEN CUT, A SMOOTH TEMPORARY PATCH (MINIMUM 1.25" ASPHALT) SHALL BE INSTALLED, PROPERLY MATCHING THE EXISTING GRADING OF THE ROADWAY. THE TEMPORARY PATCH SHALL BE ALLOWED TO REMAIN IN PLACE AND BE MAINTAINED FOR A PERIOD NO LONGER THAN 45 DAYS. THE COUNTY RETAINS THE RIGHT TO USE POSTED SURETY TO COMPLETE ANY RESTORATION WORK THAT HAS NOT BEEN COMPLETED IN THE 45 DAYS PERIOD. ALTERNATIVE TEMPORARY TRENCH PROTECTION (STEEL PLATES OR OTHERS) MAY BE APPROVED BY THE CONSTRUCTION COORDINATION DIVISION.
E) THE FINAL RESTORATION, THE ROAD SHALL BE MILLED/RESURFACED FOR A FULL LANE WIDTH OF THE TRAVEL LANES ENCROACHED BY THE TRENCH AREA, INCLUDING A TRANSITION AREA OF 50 FT ON EACH SIDE OF THE TRENCH, THE PAVEMENT SHALL BE MILLED AND RESURFACED PER CONSTRUCTION NOTE 6.
F) APPROVED MAGNETIC TAPE IS REQUIRED FOR ALL MAIN PRESSURE PIPES AND CONDUIT IN THE COUNTY'S RIGHT-OF-WAY. INSTALL TAPE 24" BELOW FINISHED GRADE.
G) CONTINUOUS 4" WIDE PAINT STRIPING IS REQUIRED FOR DIP/PCCP WATER MAINS (BLUE), DIP SANITARY MAINS (GREEN), DIP RECLAIMED WATER MAINS (PURPLE), GAS MAINS (YELLOW), OR AS REQUIRED BY THE APWA.

OPEN CUT PIPE INSTALLATION THOROUGHFARE ROAD 25W

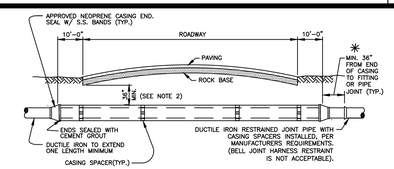

CARRIER PIPE SIZE	STEEL CASING INSIDE DIAMETER (MIN)	MINIMUM WALL THICKNESS (SEE NOTE 2)
4"	12"	.188
6"	14"	.250
8"	20"	.250
10"	20"	.250
12"	24"	.250
14"	24"	.250
16"	30"	.312
18"	30"	.312
20"	36"	.372
24"	42"	.500
30"	48"	.500
36"	54"	.625
42"	60"	.625
48"	72"	.625

NOTE:

1. A TO-SCALE PROFILE DRAWING FOR EACH UTILITY MAIN JACK AND BORE IS REQUIRED. ALL RELEVANT DATA MUST BE SHOWN (LENGTH AND SIZE OF CASING, PIPE CONFLICTS, ELEVATIONS, ETC.).
2. THICKER WALL CASINGS AND LARGER COVER OVER CASING MAY BE REQUIRED BY THE RIGHT-OF-WAY OWNER.
3. ✱ STEEL CASING SHALL BE COATED OUTSIDE WITH COAL TAR EPOXY (MIN. 16 MILS DFT).
4. ✱ PIPE IN CASING SHALL BE PULLED TO FULLY ENGAGE RESTRAINT.

POTABLE WATER MAIN CASING INSTALLATION DETAILS 22W

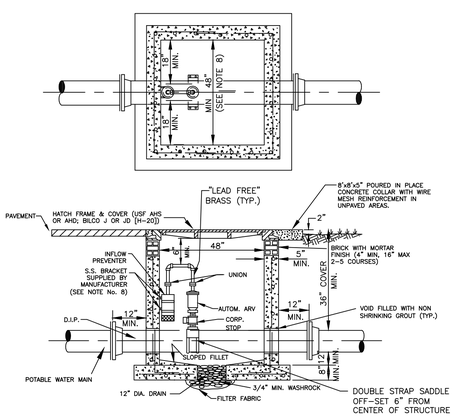

NOTES:

1. 4000 P.S.I. TYPE II PRECAST CONCRETE WITH STEEL REINFORCEMENT. SHOP DRAWING IS REQUIRED
2. AIR RELEASE VALVE SHALL BE TYPE AND SIZE APPROPRIATE FOR SERVICE INTENDED. FORCE MAINS REQUIRE 2" MIN.
3. ALL OPENINGS SHALL BE SEALED WITH WATERPROOF NON-SHRINKING GROUT.
4. OTHER VAULT AND COVER DESIGNS MAY BE USED UPON SUBMITTAL AND APPROVAL OF SHOP DRAWINGS.
5. DUCTILE IRON PIPE IS REQUIRED THROUGH THE VAULT. NO PIPE JOINTS INSIDE OR WITHIN 12" OF THE VAULT.
6. THREADED AREAS OF BRASS FITTINGS SHALL BE SPIRAL WRAPPED WITH TWO WRAPS OF TEFLON TAPE.
7. LARGER VAULTS WILL BE REQUIRED FOR PIPES LARGER THAN 12"

PIPE SIZE	MIN. VAULT SIZE
16"-24"	4'x5'
30"-42"	4'x6'

8. SHOP DRAWINGS ARE REQUIRED FOR CUSTOM MADE BRACKETS

POTABLE WATER MAIN UNDERGROUND AIR RELEASE VALVE AND VAULT IN NON-TRAFFIC AREAS OUTSIDE OF ROAD R/W 28W

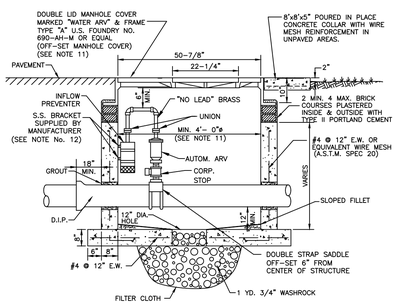

NOTES:

1. PRECAST CONCRETE TYPE # 4000 P.S.I. A SHOP DRAWING IS REQUIRED.
2. ALL OPENINGS SHALL BE SEALED WITH A WATERPROOF NON-SHRINKING GROUT.
3. LIFT HOLES ARE PERMITTED.
4. ALL PIPE HOLES SHALL BE PRECAST OR CORE-DRILLED.
5. MANHOLE FABRICATION SHALL BE IN ACCORDANCE WITH A.S.T.M. C-478 LATEST STANDARD.
6. CONCRETE COLLAR REQUIRED WHEN MANHOLE IS OUTSIDE OF PAVEMENT, SEE DETAIL.
7. AIR RELEASE VALVE SHALL BE TYPE AND SIZE APPROPRIATE FOR SERVICE INTENDED. FORCE MAINS REQUIRE 2" MIN.
8. DUCTILE IRON PIPE IS REQUIRED THROUGH THE VAULT. NO PIPE JOINTS INSIDE OR WITHIN 18" OF THE MANHOLE.
9. THREADED AREAS OF BRASS FITTINGS SHALL BE SPIRAL WRAP WITH TWO WRAPS OF TEFLON TAPE.
10. FOR PIPES 12" AND SMALLER, AN ALTERNATIVE DESIGN WITH APPROVED 32" DIAMETER HINGED MANHOLE COVERS WILL BE CONSIDERED.
11. LARGER MANHOLES WILL BE REQUIRED FOR PIPES LARGER THAN 12"

PIPE SIZE	MIN. MANHOLE DIAMETER
16"-24"	60"
30"-42"	72"

12. SHOP DRAWINGS ARE REQUIRED FOR CUSTOM MADE BRACKETS

POTABLE WATER MAIN AIR RELEASE MANHOLE IN PAVED AREAS AND ROAD R/W 29W

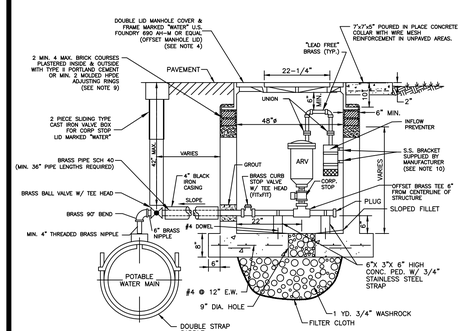

NOTES:

1. MONOLITHICALLY POURED STRUCTURE IS REQUIRED (ASTM C-478)
2. ALL OPENINGS SHALL BE SEALED WITH A WATERPROOF NON-SHRINKING GROUT.
3. ALL PIPE HOLES SHALL BE PRECAST OR CORE-DRILLED.
4. ALTERNATIVE DESIGN WILL BE CONSIDERED USING APPROVED 32" DIAMETER HINGED MANHOLE COVER
5. ARV, TAP AND PIPING TO BE TYPE AND SIZE APPROPRIATE FOR SERVICE INTENDED.
6. CONCRETE COLLAR REQUIRED IN UNPAVED AREAS.
7. SHOP DRAWING IS REQUIRED FOR REVIEW AND APPROVAL.
8. THREADED AREAS OF BRASS FITTINGS AND OTHER FITTINGS SHALL BE SPIRAL WRAPPED WITH TWO WRAPS OF TEFLON TAPE.
9. IN LIEU OF BRICK WORK, APPROVED PRECAST CONCRETE ADJUSTING RINGS MAY BE USED. INSTALLATION SHALL FOLLOW MANUFACTURERS RECOMMENDATIONS.
10. SHOP DRAWINGS ARE REQUIRED FOR CUSTOM MADE BRACKETS
11. PIPE AND FITTINGS SHALL BE NO LEAD BRASS.

POTABLE WATER MAIN OFF-SET UNDERGROUND AIR RELEASE VALVE 30W

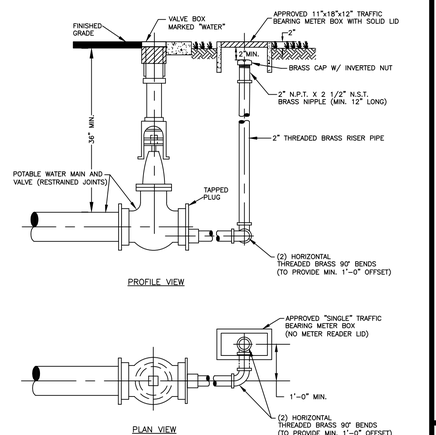
FINISHED GRADE
VALVE BOX MARKED "WATER"
APPROVED 11"x18"x12" TRAFFIC BEARING METER BOX WITH SOLID LID
2" MIN.
2"
BRASS CAP W/ INVERTED NUT
2" N.P.T. X 2 1/2" N.S.T. BRASS NIPPLE (MIN. 12" LONG)
36" MIN.
2" THREADED BRASS RISER PIPE
POTABLE WATER MAIN AND VALVE (RESTRAINED JOINTS)
TAPPED PLUG
(2) HORIZONTAL THREADED BRASS 90° BENDS (TO PROVIDE MIN. 1'-0" OFFSET)
PROFILE VIEW
APPROV